Nuclear Engineering and Technology 48 (2016) 1059–1070

Available online at ScienceDirect

Nuclear Engineering and Technology

journal homepage: www.elsevier.com/locate/net

Invited Article

Overall System Description and Safety Characteristics of Prototype Gen IV Sodium Cooled Fast Reactor in Korea

Jaewoon Yoo[*], *Jinwook Chang, Jae-Yong Lim, Jin-Sik Cheon, Tae-Ho Lee, Sung Kyun Kim, Kwi Lim Lee, and Hyung-Kook Joo*

Korea Atomic Energy Research Institute, 989-111, Daedeok-Daero, Yuseong-Gu, Daejeon, 34057, Republic of Korea

ARTICLE INFO

Article history:
Received 9 August 2016
Accepted 17 August 2016
Available online 24 August 2016

Keywords:
Inherent Safety
Metal Fuel
Passive Safety
Pool Type
Sodium Cooled Fast Reactor

ABSTRACT

The Prototype Gen IV sodium cooled fast reactor (PGSFR) has been developed for the last 4 years, fulfilling the technology demonstration of the burning capability of transuranic elements included in light water reactor spent nuclear fuel. The PGSFR design has been focused on the robustness of safety systems by enhancing inherent safety characteristics of metal fuel and strengthening passive safety features using natural circulation and thermal expansion. The preliminary safety information document as a major outcome of the first design phase of PGSFR development was issued at the end of 2015. The project entered the second design phase at the beginning of 2016. This paper summarizes the overall structures, systems, and components of nuclear steam supply system and safety characteristics of the PGSFR. The research and development activities to demonstrate the safety performance are also briefly introduced in the paper.

Copyright © 2016, Published by Elsevier Korea LLC on behalf of Korean Nuclear Society. This is an open access article under the CC BY-NC-ND license (http://creativecommons.org/licenses/by-nc-nd/4.0/).

1. Introduction

The light water reactor (LWR) has been operated and has played a significant role of a stable electricity supply and in economic growth in Korea since 1978. There are 22 LWRs and four CANDU type reactors currently in operation, four pressurized water cooled reactors (PWRs) under construction and four additional PWRs planned by 2029 based upon the 7th National Electricity Demand and Supply Plan. The construction of the nuclear power plant also supports the Paris Agreement on new climate change agreed at United Nations Climate Change Conference (COP21) in 2015 and the 2nd National Basic Energy Plan, which targets a nuclear share of 29% by 2035.

One serious obstacle in constructing an LWR is a problem with spent nuclear fuel (SNF) management because of high radiotoxicity and long half-life of SNF. Annually, about 760 tons of SNF are discharged from PWRs and the total stored SNF amounted to14,468 tons as of December 2015. In this context, the Public Engagement Commission on Spent Nuclear Fuel made 10 recommendations on future SNF management policy in 2015. One of the key recommendations is to

* *Corresponding author.*
E-mail address: jwyoo@kaeri.re.kr (J. Yoo).
http://dx.doi.org/10.1016/j.net.2016.08.004
1738-5733/Copyright © 2016, Published by Elsevier Korea LLC on behalf of Korean Nuclear Society. This is an open access article under the CC BY-NC-ND license (http://creativecommons.org/licenses/by-nc-nd/4.0/).

establish a research and development (R&D) plan for volume and toxicity reduction of SNF.

The SNF problem has been a common concern among countries which have utilized nuclear energy for a long time or have a plan to extend the utilization of nuclear energy. A sodium cooled fast reactor (SFR) has been widely recognized as a technical alternative to effectively manage the SNF, owing to its transmutation capability of long lived radiotoxic nuclides included in the SNF. It can be accomplished by using abundant high energy excessive neutrons in the core. For this reason, the SFR development plan is always accompanied with the policy for the extension of nuclear energy in many countries.

The long term development plan for the future nuclear energy systems was authorized by the Korean Atomic Energy Commission in 2008 and updated in 2011; it includes a construction of a prototype SFR by 2028, with preparation of a preliminary safety information document by 2015, issue of a specific design safety analysis report by 2017, and its approval by 2020.

The Korea Atomic Energy Research Institute (KAERI) has been developing SFR design technologies since 1997 under a national nuclear R&D program. The goals of the SFR design technology development project were to secure strategic key technologies and to develop the conceptual design of a SFR, which are necessary for an efficient utilization of uranium resources and a reduction of a high level waste volume and toxicity. To this end, conceptual designs of KALIMER-150, breakeven core design of KALIMER-1200, and the transuranics (TRU) burner of KALIMER-600 have been completed as the main outcomes of those studies [1,2].

The national project to develop the Prototype Gen IV sodium cooled fast reactor (PGSFR) was initiated to achieve the national mission stated above in 2012. For this, the Sodium Cooled Fast Reactor Development Agency dedicated to the PGSFR development was established in the middle of 2012. R&D works of the PGSFR project are mainly carried out by KAERI, KEPCO E&C, and Doosan Heavy Industry. KAERI is in charge of the design and the validation of the nuclear steam supply system and fuel development, and KEPCO E&C is responsible for balance of the plant system design. Doosan Heavy Industry is involved in the evaluation of a mechanical design and fabrication of major components. KAERI is closely working with Argonne National Laboratory under an agreement on the joint development program approved as a work-for-others contract. Argonne National Laboratory supports KAERI with their experiences in SFR development and is jointly working on the developments of codes for fuel rod performance analysis and severe accident analysis.

The first design phase of the PGSFR was completed at the end of 2015 and the second phase of the development was entered at the beginning of 2016 [3]. All of the basic design concepts of structures, systems and components were determined and incorporated into the preliminary safety information document [4,5], which includes basic design requirements and system descriptions and the results of safety analysis for representative accident scenarios.

This paper summarizes the PGSFR design and its safety characteristics performed in the first design phase of PGSFR. Other papers on the safety analysis results of PGSFR, the metal fuel development and its verification, and the safety and performance tests for the PGSFR will be published separately with this paper. Duplicated contents of those papers are briefly introduced in this paper.

2. System descriptions of the PGSFR

2.1. *Top-tier design requirements and general descriptions*

The main goal of the PGSFR development is to demonstrate transmutation capability of TRU which are major long-lived radiotoxic elements included in the LWR SNF. A high level of safety and efficient electricity generation are also requirements of the PGSFR. The major items of top tier requirements of PGSFR are listed in Table 1.

The PGSFR is a pool-type having two intermediate heat transport system (IHTS) loops with two steam generators (SGs) and its electrical capacity is 150 MWe. The PGSFR is a fast neutron spectrum reactor and uses liquid sodium as a coolant. The core generates nuclear heat of 392.2 MWt and is loaded with metal fuels of U-Zr in the initial core and of U-TRU-Zr in the final equilibrium core. All of the structures, systems, and components of the primary heat transport system (PHTS) are contained in the reactor vessel. The system operates under atmospheric pressure so that there is no possibility of high pressure release by pipe breaks, unlike in loop-type LWRs. The large sodium inventory inside the reactor vessel provides a large thermal inertia which relieves a thermal transient and allows a relatively longer grace period in an accident condition.

The initial core of the PGSFR is loaded with low enriched uranium metal fuel (U-10% Zr) for a system performance demonstration and as a test bed for TRU fuel irradiation as shown in Table 2. Several lead test rods and lead test assemblies containing TRU fuel made of recycled from LWR SNF (LWR-TRU) will be loaded and qualified during this period.

Table 1 – Top tier design requirements of Prototype Gen IV sodium cooled fast reactor (PGSFR).

Parameters	Requirements
General requirement	Demonstration of TRU burning capability and fully closed fuel cycle with pyro-processing technology
Fuel	U-10% Zr fuel for initial core U-TRU-Zr fuel for final equilibrium core
Power	More than 150 MWe
Outlet temperature	More than 545°C (Thermal efficiency ~ 40%)
Design life time and capacity factor	60 yr and more than 75% average capacity factor
Safe shutdown earthquake	0.3 g (seismically isolated)
Core damage frequency	Less than 10^{-6}/reactor-yr
Operator grace period	More than 2 hr
SBO coping time	More than 72 hr

SBO, station black out; TRU, transuranics.

Table 2 – Evolution of Prototype Gen IV sodium cooled fast reactor (PGSFR) core.

U core (initial)	LTRU core (mid-term)	MTRU core (final)
• U-10%Zr fuel • Open fuel cycle • LWR-TRU (LTRU) [a]fuel demonstration • LTR and LTA test zone installation	• U-TRU-Zr fuel • LWR-TRU equilibrium • Open fuel cycle • LWR-TRU and self TRU mixed (MTRU)[b] fuel demonstration	• U-TRU-Zr fuel • TRU core equilibrium with self-recycling + LWR recycling (MTRU fuel equilibrium)

[a] LTRU = TRU recycled from LWR SNF.
[b] MTRU = mixed TRU with self-recycled TRU + LTRU.
LTA, lead test assembly; LTR, lead test rod; LWR, light water reactor.

After qualification of LWR-TRU fuel, the U-TRU-Zr fuel will be loaded into the core batch-by-batch. Until this stage, the back end fuel cycle will be kept as once-through without self-recycling. The in-reactor performance of the mixed TRU with self-recycled TRU fuel (MTRU) will also be demonstrated during the light water cooled reactor TRU (LTRU) core operation. Finally, the fully closed fuel cycle with the self-recycling will be demonstrated in the MTRU core.

Fig. 1 shows the key design features and schematic diagram of the PGSFR. A total of 217 fuel rods are arranged in a triangular configuration within fuel subassembly. A total of 112 fuel subassemblies are loaded into the core in the hexagonal configuration. The active core height is about 90 cm. The cycle length of uranium equilibrium core is about 290 effective full power days. There is neither an axial blanket nor radial blanket to prevent excessive TRU production in the blanket region. The active core is directly faced into the steel reflector without a blanket.

The PHTS of the PGSFR is a pool type. All of the structures and components of the PHTS, four intermediate heat exchangers (IHXs) and two mechanical pumps are submerged into a large sodium pool confined by double vessels: reactor vessel and containment vessel. The IHTS consists of two loops with two SGs. An annular linear induction pump is used in the IHTS. A sodium-water reaction pressure relief system (SWRPRS) is connected to the IHTS pipes to prevent overpressure of IHTS loops and IHX tubes when the sodium-water reaction occurs in the SG. The IHTS pipes inside containment are double-walled. The gap between inner and outer pipes, as well as the gap between the reactor and containment vessels is filled with inert gas and continuously monitored by diverse leak detectors.

The decay heat is rejected to the atmosphere by the decay heat removal system (DHRS). The DHRS consists of four trains: two active DHRSs (ADHRSs) and two passive DHRSs (PDHRSs). The sodium to air heat exchangers are a finned tube type for

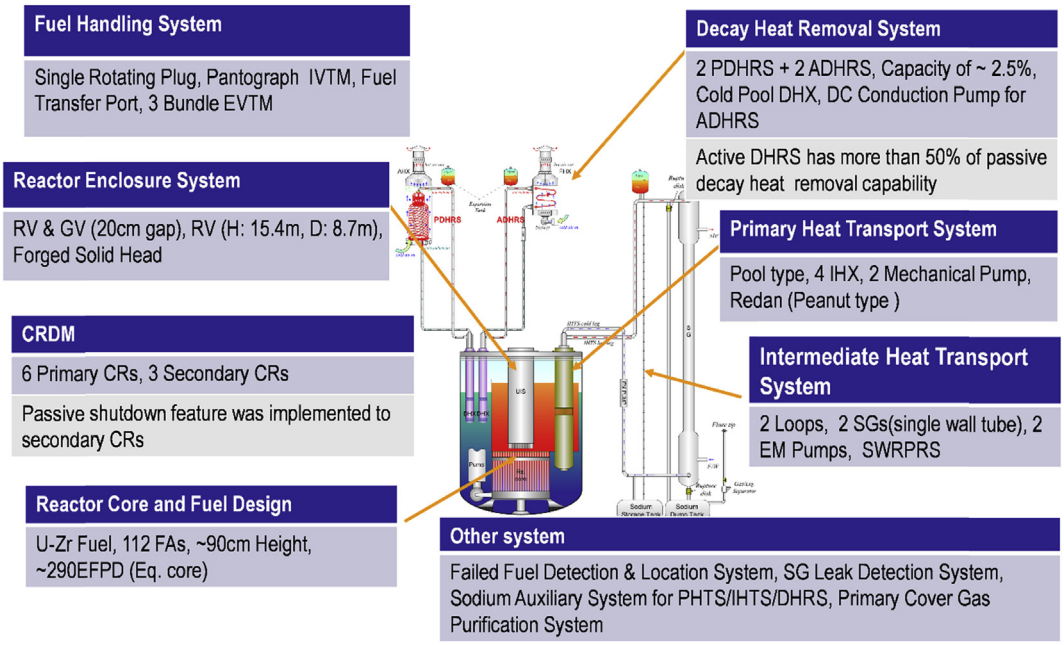

Fig. 1 – Key design features of the Prototype Gen IV sodium cooled fast reactor (PGSFR). ADHRS, active decay heat removal system; CR, control rod; CRDM, control rod driving mechanism; DHRS, decay heat removal system; EFPD, effective full power day; EVTM, ex-vessel transfer machine; DHX, decay heat exchanger; GV, guard vessel; IHTS, intermediate heat transport system; IHX, intermediate heat exchanger; IVTM, in-vessel transfer machine; PDHRS, passive decay heat removal system; PHTS, primary heat transport system; RV, reactor vessel; SG, steam generator; SWRPRS, sodium-water reaction pressure relief system.

the ADHRSs and a helical coil type for the PDHRSs. Active functions of ADHRSs are provided by a DC conduction pump and an air blower. The active circuit has also a passive function by natural circulation of sodium and air. The passive heat removal capacity of the active circuit is more than 50% of designed heat removal capacity when the pump and blower are not operable.

The PGSFR has an independent and diversified safety shutdown system which consists of six primary control rods and three secondary shutdown rods. A passive shutdown mechanism is applied to the secondary shutdown rods for additional shutdown capability during beyond design basis accidents.

2.2. *Fuel and reactor core*

The PGSFR has a radially homogeneous core configuration which comprises annular rings of driver fuel subassemblies. As shown in Fig. 2, the reactor core consists of 52 inner fuel subassemblies, 60 outer fuel subassemblies, nine control assemblies, 90 reflector assemblies, and 102 B_4C shield assemblies. The active core height is 90.0 cm and the radial equivalent diameter of uranium core including control assemblies is 157.5 cm. The fuel enrichment of two fuel zones is identically 19.2 wt.% of U-235 during the uranium equilibrium core, but the refueling schemes are different in four batch refueling for inner fuel subassemblies and five batch refueling for outer fuel subassemblies.

Major core and fuel subassembly design parameters are given in Table 3. The fuel form is U-10% Zr metallic fuel for initial core, and the fuel will be replaced by U-TRU-Zr ternary alloy in connection with pyroprocessing of LWR SNF. The gap between fuel slug and cladding is bonded by sodium. The fuel cladding material has been chosen to be FC92 to improve high temperature strength and creep resistance. A fission gas plenum of 125 cm is located above the fuel slug and sodium bond. Block type reflectors are located above and below the fuel bundle for axial neutron shielding, 50 cm and 90 cm for upper and lower reflectors in thickness, respectively.

The assembly pitch is 13.54 cm. Each driver fuel subassembly consists of 217 fuel rods and the fuel has smeared density of 75% to accommodate the fuel thermal expansion and irradiation swelling. The schematic diagram of the fuel rod and fuel subassembly is shown in Fig. 3. In the equilibrium cycle of uranium fueled core, the refueling interval is 12 months of operation and one-fourth or one-fifth of the driver fuel subassemblies are replaced during each outage. The fuel subassemblies are not shuffled, and remain in the same position over the entire cycles. Following removal from the core, they are to be stored for decay in in-vessel storage (IVS) positions.

Reactivity control for normal operations of startup, load change, and shutdown is accomplished by manipulation of the control rod system in the core. The control rod system consists of the primary and secondary control systems. The primary and secondary control systems contain six and three control rod assemblies, respectively. Two independent and diverse shutdown systems are provided for ensuring safe shutdown of the reactor, even when one system is not available. Both systems are designed to shut down the reactor within 2 s. In addition, the secondary control system utilizes the passive shutdown, which is automatically operated by thermal expansion when the hot pool temperature increases to the specific value.

Core neutronics performance parameters for the uranium equilibrium cycle are summarized in Table 4. The U-235 enrichment at the equilibrium state is about 19.2 wt.% throughout fuel subassemblies. The average discharge burnup is 66.1 MWD/kg and the local peak fuel discharge burnup is 104.7 MWD/kg. The peak linear power is evaluated to be 323.7 W/cm.

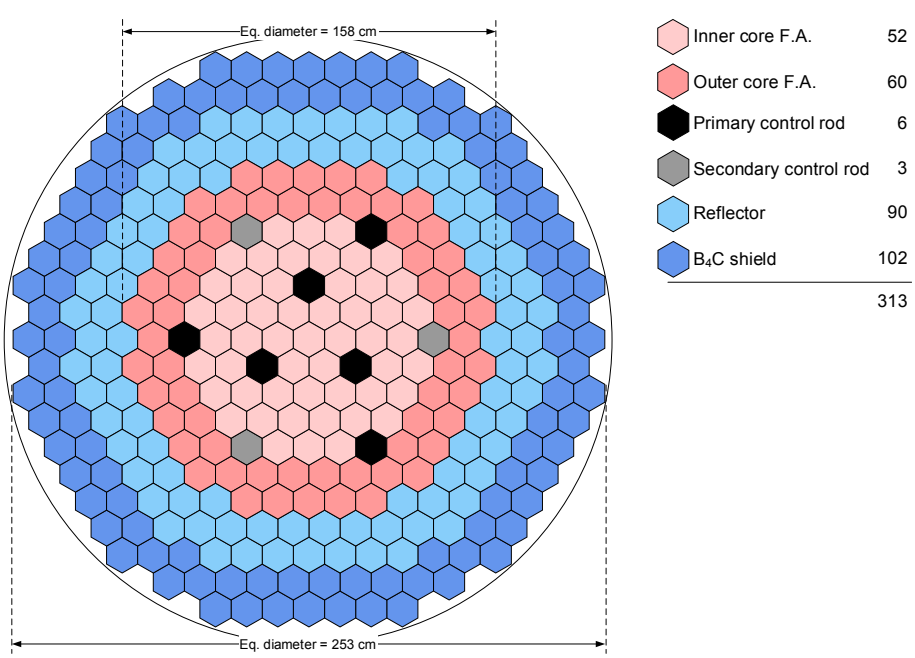

Fig. 2 – Radial layout of the Prototype Gen IV sodium cooled fast reactor (PGSFR) core.

Table 3 – Major design parameters of Prototype Gen IV sodium cooled fast reactor (PGSFR) uranium equilibrium core.

Core thermal power (MWt)	392.2
Electrical output (MWe)	150
Core inlet/outlet temperature (°C)	390/545
Fuel type	U-10% Zr
Fuel pin outer diameter (mm)	7.4
Fuel pins per fuel subassembly	217
Fuel pin pitch to diameter ratio	1.14
Fuel assembly pitch (mm)	13.54
Fuel cladding material	FC92 (ferrite martensitic steel)
Fuel cladding thickness (mm)	0.5
Fuel assembly structure material	HT9
Active core height (cm)	90
Fission gas plenum length (cm)	125
Upper/lower reflector length (cm)	50/90
Number of fuel subassemblies, inner/outer	52/60
Number of batch, inner/outer core	4/5

2.3. *Reactor assembly*

All primary structures, systems, and components are contained in the reactor vessel as shown in Fig. 4. The reactor vessel has neither penetration nor attachment and is connected to the bottom of the reactor head. The core assemblies are supported on the grid plate of the inlet plenum which is again supported on the core support structure. The reactor vessel is surrounded by the containment vessel with a gap of 200 mm to provide the in-service inspection by using an electromagnetic acoustic transducer (EMAT) sensor driven by a remotely operating vehicle. The gap between the reactor and containment vessels is filled with inert nitrogen gas and is continuously monitored by diverse sodium leak detectors. The hot and cold pools are separated by a redan and a separation plate. The biological shield structures are located outside and above the core to maintain the integrity of the major structure against neutron irradiation during the plant lifetime and to prevent excessive neutron activation of IHTS sodium in the IHXs.

Table 4 – Performance parameters of uranium equilibrium core.

U-235 enrichment (wt.%)	19.2
Heavy metal inventory (ton)	7.33
Charged heavy metal amount (ton/cycle)	1.68
Average/peak discharge burnup (MWd/kg)	66.1/104.7
Reactivity swing (pcm)	2,176
Fast neutron flux ($\times 10^{15}$ #/cm^2-sec, E > 0.1 MeV)	1.44
Peak fast neutron fluence ($\times 10^{23}$ #/cm^2, E > 0.1 MeV)	2.88
Average/peak linear power density (W/cm)	159.7/323.7
Average/peak volumetric power density (W/cm^3)	213.4/432.5

The reactor head is a single forged thick plate and supports IHXs, decay heat exchangers (DHXs), and a primary pump. Thermal shield plates are placed below the reactor head above the cover gas to lower the reactor head temperature. The reactor vessel and reactor head are made of Type 316 SS and the containment vessel is made of 2.25Cr-1Mo.

The IVS cools down the spent fuel during one or two cycles after discharge from the core inside the reactor vessel. The IVS is located between the IVS shroud and core barrel outside of the core. The IVS accommodates about 60 spent fuel subassemblies. The spent fuel inside the IVS is cooled by a natural circulation of hot pool sodium.

2.4. *Heat transport systems*

The reactor coolant system and connected systems in the PGSFR mainly consist of PHTS, IHTS, SGS, SWRPRS, and DHRS as shown in Fig. 5. The major design parameters of the reactor coolant system are given in Table 5. The PHTS circulates primary sodium through the reactor core and transports the heat generated from the core to the IHTS under power operation and normal shutdown operations. Major components of the system are four IHXs, two PHTS pumps, and the reactor structures. Four DHXs of the DHRS are also immersed in the reactor pool. The reactor vessel is enveloped by the containment vessel to confine the leakage of primary sodium.

During normal operation, the primary sodium coolant is circulated inside the reactor vessel. The primary sodium is

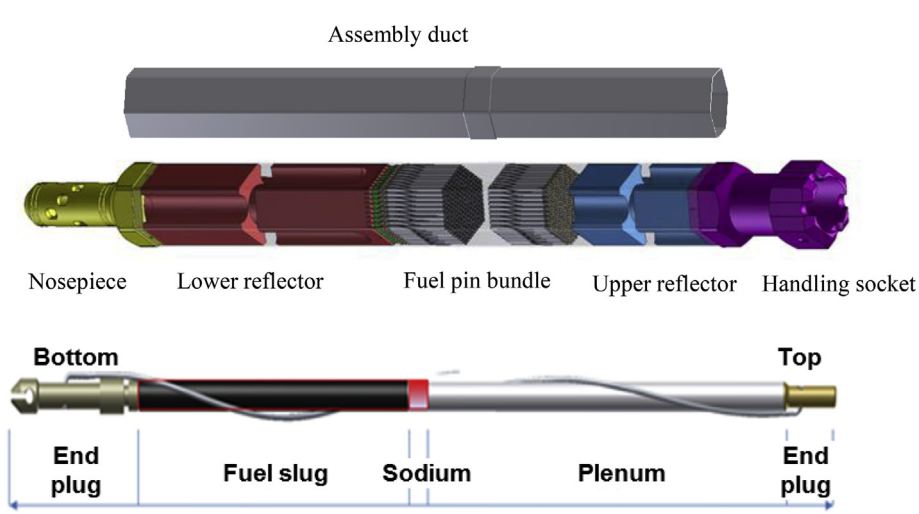

Fig. 3 – Schematic of fuel rod and fuel subassembly.

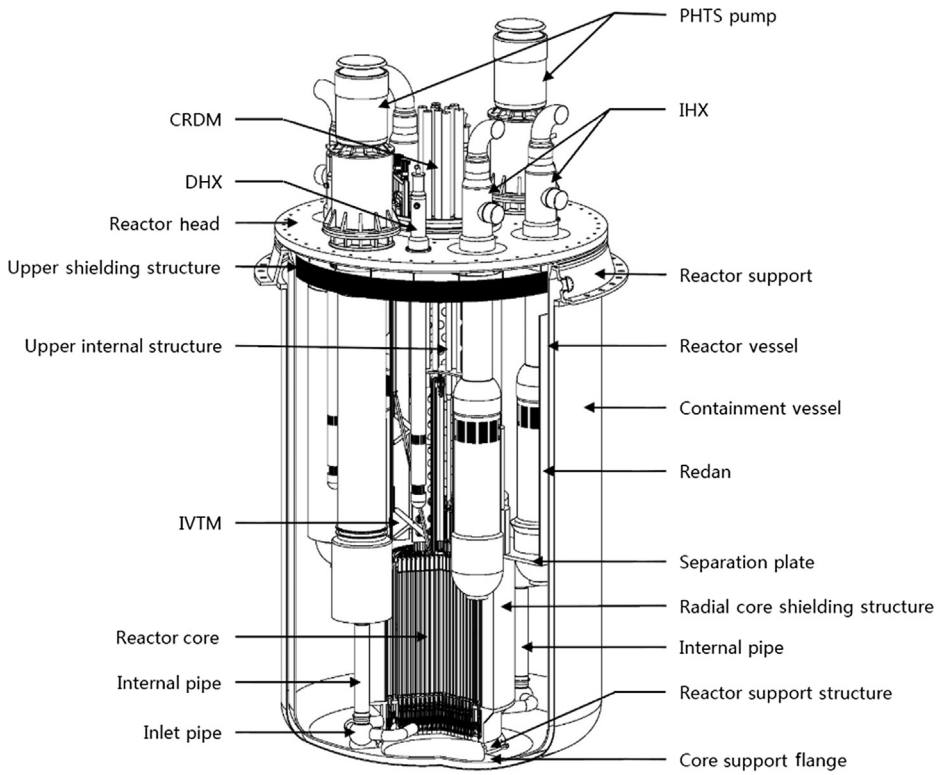

Fig. 4 – Layout of reactor assembly. CRDM, control rod driving mechanism; DHX, decay heat exchanger; IHX, intermediate heat exchanger; IVTM, in-vessel transfer machine; PHTS, primary heat transport system.

heated as it passes through the core and goes up into the hot pool. The heated hot pool sodium enters the shell sides of four IHXs where it delivers core heat to the IHTS and then the cooled sodium enters the cold pool. The IHTS sodium entering the tube sides of four IHXs absorbs the heat from the PHTS. Also, the limited amount of cold pool sodium flows through the shell sides of four DHXs to prevent freezing of the DHRS sodium and it returns to the cold pool. Two PHTS pumps located in the cold pool drive sodium to the core through the internal pipe connected to pump exits and the inlet plenum.

The PHTS pressure is maintained at a slightly higher than atmospheric pressure of 0.11 MPa under normal operating conditions to protect from the ingress of gaseous impurities into the primary sodium and to provide a sufficiently high available net positive suction head for the PHTS pump. PHTS pressure is maintained within the operating range by controlling the pressure of cover gas above the sodium free surface through the use of the primary inert gas purification system.

Physical arrangements of the PHTS are described as follows: (1) the PHTS pumps and the IHXs are located symmetrically in the annular region between the shielding structure and the redan and arranged through the separation plate between hot and cold pools; (2) the DHXs and the IHXs are located at a higher elevation than the core to remove core decay heat by natural circulation when all PHTS pumps are not available; (3) all of the structures and components are arranged so that the primary flow path is maintained even in the case of primary sodium leak into the containment vessel. Inlet windows of IHXs and DHXs are submerged into the primary sodium even when the primary sodium is leaked into the gap between the reactor and containment vessels; (4) the sodium level inside the reactor vessel under all normal and transient operating conditions is maintained to prevent the gas entrainment into the IHX and to protect the PHTS pump from cavitation; (5) cold pool sodium level between the redan and reactor vessel is lower than the hot pool sodium level. This level difference comes from the pressure loss through the shell side of the IHX; (6) the cover gas volume is sized to absorb pressure transients during all system operation modes; and (7) the reactor head temperature is controlled below 150°C to protect seal materials by shield plates and the reactor head cooling system.

Two PHTS pumps circulate the primary sodium. The pumps are motor-driven centrifugal type mechanical pumps made of Type 316SS. The flow rate and head of the PHTS pump are controlled by varying the rotating speed of the pump impeller. The power of the pump is normally supplied from a normal power distribution system. All PHTS pumps are equipped with flywheels for ensuring required coastdown flow and with oil supplying systems for cooling mechanical seal.

Four cylindrical-shaped IHXs are installed in the PHTS along with two primary pumps. The IHXs are sized such that heat produced in the reactor core can be suitably transferred to the sodium coolant in the IHTS for all operation modes

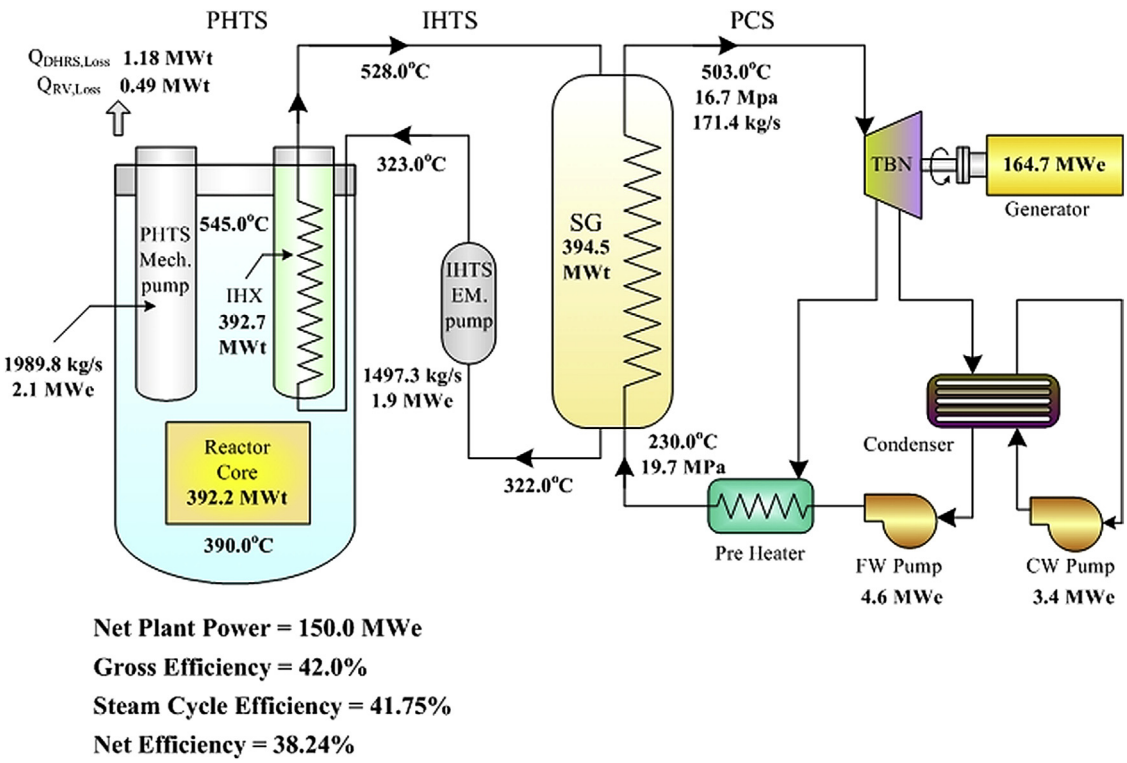

Fig. 5 – Heat balance of Prototype Gen IV sodium cooled fast reactor (PGSFR) main heat transport system. IHTS, intermediate heat transport system; EM, electro-magnetic; PCS, power conversion system; PHTS, primary heat transport system; SG, steam generator; TBN, turbine.

when all the primary coolant pumps are in operation. The IHX is made of 9Cr-1Mo-V material and consists of shell-and-tube type heat exchangers with a counter-current flow heat exchanging mechanism. The unit has a vertical orientation inside the reactor vessel, and its design arrangement properly provides downward and upward flow of the primary and intermediate sodium, respectively. The IHX component is vertically supported on the reactor closure head with IHX support flange structure.

The IHTS is composed of two loops, each loop of which mainly consists of two IHXs, one electromagnetic pump, one expansion tank, and one SG. The IHTS pipes are connected to the sodium drain piping, SWRPRS, and sodium and gas supply and purification systems. The IHTS pump is an annular linear induction pump which is located at the cold leg piping of IHTS. The IHTS is designed to maintain its integrity under the temperature rise and pressure loading when a sodium-water reaction occurs in the SG. The five double ended guillotine ruptures of SG tubes are used as a design basis of IHTS. The portion of the IHTS loop pipe within the containment boundary is surrounded by a guard pipe which precludes the sodium leak inside the containment. The cover gas pressure of the IHTS expansion tank is maintained slightly higher than that of the PHTS under normal operating conditions. Accordingly, radioactive primary sodium does not leak into the IHTS even in case of the IHX tube leak. The IHTS pipe is sloped from the IHX upward to the SG for a smooth draining of the IHTS sodium. The IHTS pipe layout is also designed to accommodate the thermal expansion of components and pipes.

At the early stage of the PGSFR conceptual design, a number of SG types were investigated in terms of design feasibility. For example, helical coil type tube bundle and double-wall tube bundle SGs were considered. The SG design has been determined as an integrated once-through and monolithic type with a straight single wall tube, taking into account a fabrication capability and scalability to the commercial application. Orifices are provided in each tube to prevent the flow instability in the SG tube side where two-phase steam-water flow exits during normal operating conditions.

Table 5 – Design parameter of Prototype Gen IV sodium cooled fast reactor (PGSFR) reactor heat transport system.

Mass flow rate of PHTS (kg/sec)	1,989
Total sodium inventory of PHTS (ton)	538
Volume of PHTS cover gas (m^3)	87.2
Hot/cold loop temperature of IHTS (°C)	528/322
Mass flow rate of IHTS (kg/sec)	1,497
Steam/feedwater temperature of SG (°C)	503/230
Steam/feedwater pressure of SG (MPa)	16.7/19.7
Feedwater flow rate of SG (kg/sec)	171.4
Number of PHTS pumps	2
Number of IHXs	4
Number of IHTS pumps	2
Number of SGs	2

IHX, intermediate heat exchanger; PHTS, primary heat transport system; SG, steam generator.

The residual heat removal in the reactor system is accomplished by using condenser cooling with an SG feed water system and safety-grade DHRS. During the scheduled plant shutdown, the reactor core heat is removed through the heat transport path of the PHTS, IHTS, and the main condenser cooling of SG systems. However, when the normal heat transport path is not available, the safety-grade DHRSs start their operation to remove the system heat load imposed by the temperature transient of the reactor coolant system.

The safety-grade DHRS consists of four trains to satisfy the independent and diverse system requirements. Two trains of the DHRS are the PDHRSs and the other two trains are the ADHRSs. Heat removal capacity of DHRS is 2.5% of the rated thermal power. Only with two trains of the DHRS can the core decay heat be properly removed during a design basis accident condition. Fig. 6 shows the layout of the reactor assembly, IHTS, and DHRS.

The safety-grade PDHRS system comprises independent two heat removal loops. Each loop is equipped with a single DHX, a single natural-draft sodium-to-air heat exchanger (AHX), main sodium pipes connecting DHX with AHX, an expansion tank, an air damper, and related instrumentation. The PDHRS employs a completely passive mechanism without any provision of active components in the AHX shell-side air path. This passive feature has superiority from the aspect that an operational reliance of decay heat removal system can be secured by removing any operator action. The DHX is a shell-and-tube type counter-current flow sodium-to-sodium heat exchanger. The DHX is immersed in the cold pool which makes the flow path for decay heat removal simpler and removes the concern of overcooling of the hot pool. The AHX is a shell-and-tube type counter-current flow heat exchanger with a helically coiled tube arrangement. Liquid sodium flows inside the heat transfer tubes and atmospheric air flows over the helical tubes.

The safety-grade ADHRS comprises independent two heat removal loops. Each loop is equipped with a single DHX, a single forced-draft sodium-to-air heat exchanger (FHX), the main sodium pipes connecting DHX with FHX, an expansion tank, an electromagnetic pump, an air damper, and an air blower. The ADHRS employs a similar heat removal path with that of the PDHRS, but it is designed to be operated by using forced sodium circulation and forced-draft air flow. The ADHRS is also operated in passive mode against a loss of power supply, in which case its heat removal capacity is more than 50% that of the rated value. This mode is very similar to the passive mode of the PDHRS, which is surely possible by using the density difference attained from the geometrical elevation difference of the thermal centers between the DHX and FHX. The FHX is a shell-and-tube type counter-current flow heat exchanger with a serpentine finned-tube arrangement. During normal operating conditions, the dampers in the PDHRSs and the ADHRSs are slightly opened to prevent a reverse flow in the DHRS loops.

The SWRPRS is provided to protect the IHTS against excessive pressure which might be caused by sodium-water reaction in the SG. It is designed to discharge the rapidly increasing sodium water reaction products and to relieve the IHTS pressure from a large sodium-water reaction in the SG. The SWRPRS consists of a sodium dump tank, a liquid-gas separator, a rupture disc, a backpressure rupture disc, and connecting pipes. The rupture discs are installed at the SG inlet and outlet pipes. Excessive pressure in the IHTS and SG makes the rupture disc burst, and then sodium coolant and SWR byproducts are dumped into the sodium dump tank. Gaseous reaction products and entrained sodium are directed to the liquid-gas separator to remove a liquid reaction product and sodium. The gaseous products are then discharged to the stack where a hydrogen igniter is installed.

2.5. *In-vessel fuel handling*

Since the sodium coolant is opaque and the reactor head cannot be opened during the refueling, in-vessel fuel handling is remotely operated by an in-vessel transfer machine (IVTM). The IVTM is installed to the single rotating plug located at the reactor head. The driving motor of the IVTM is installed above the reactor head and the pantograph-type gripper devices are moved inside the reactor vessel as shown in Fig. 7. Rotational motion is provided by the single rotating plug movement and the pantograph arm is extended or contracted, which enables it to handle all the subassemblies in the core.

The subassemblies will be transferred to the ex-vessel transfer machine (EVTM) cask through the fuel transport port (FTP). The FTP is a cylindrical structure fixed to the reactor head. The upper part of the FTP is connected to the EVTM by a flange and the bottom part is partially opened to accommodate the subassembly. The EVTM has a capacity of three subassemblies and moves it to a fuel handling building outside the reactor building.

3. Safety characteristics of the PGSFR

3.1. *Inherent safety characteristics*

The SFR has been considered as one of the most promising candidates for the Generation IV reactor system to achieve four technology goals of sustainability, enhanced safety and reliability, economic competitiveness, and proliferation resistance. The PGSFR has been designed to demonstrate the key technologies that satisfy the technology goals including the demonstration of the TRU burning capability recycled from the LWRs.

The safety principle of the PGSFR is a defense-in-depth philosophy as of the conventional nuclear power plant, but reflecting emphasized concern on the severe accident after the Fukushima daiichi accident. The safety design approach of the PGSFR has been concentrated on the prevention of a severe accident and additional design measures are separately prepared to mitigate the severe accident. This can be achieved by maximizing the inherent and passive safety features of the plant.

The safety advantages of the PGSFR come from its basic design features of sodium coolant, pool type PHTS arrangement, and use of metal fuel [6]. The sodium coolant has a high boiling point of 883°C at atmospheric pressure, which provides a large boiling margin more than 330°C from the normal operating temperature of 545°C. The PGSFR is a pool type and is operated at about atmospheric pressure. This could eliminate the possibility of large pressure release accidents caused by a primary pipe break and the need of high pressure

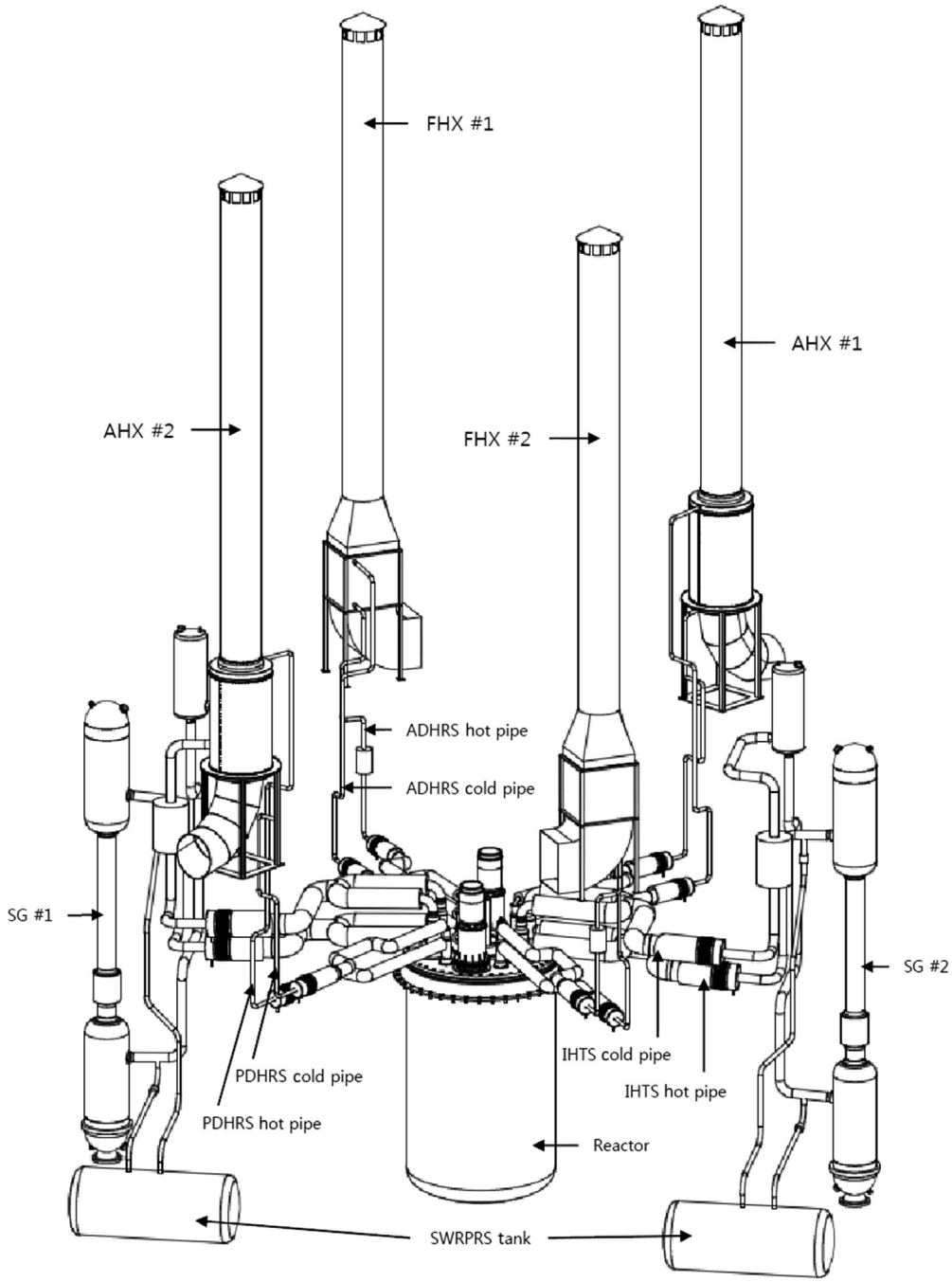

Fig. 6 – Arrangement of intermediate heat transport system (IHTS) and decay heat removal system (DHRS). ADHRS, active decay heat removal system; AHX, natural-draft sodium-to-air heat exchanger; FHX, forced-draft sodium-to-air heat exchanger; PDHRS, passive decay heat removal system; SG, steam generator; SWRPRS; sodium-water reaction pressure relief system.

injection systems as in PWRs. Lower pressure of the PHTS also provides the possibility of low design pressure of containment. The large amount of the sodium coolant within the reactor vessel plays a role of a large thermal heat sink at an early stage of the accident, which makes the thermal transient of the system tardy and mild. The large temperature rise in the core and PHTS enables bringing about more negative reactivity feedback by thermal expansion to enhance the passive decay heat cooling driven by natural circulation during later stages of the accident. The sodium coolant is chemically compatible with the steel material especially against corrosion, which ensures the long-term reliable operation of the structures and components submerged in sodium.

One of the key inherent safety features comes from fuel material. Performance of metal fuel during normal and accident conditions is supported by intrinsic thermal, mechanical, and neutronics properties. Metal fuel has a much higher thermal conductivity than that of oxide fuel, which implies a

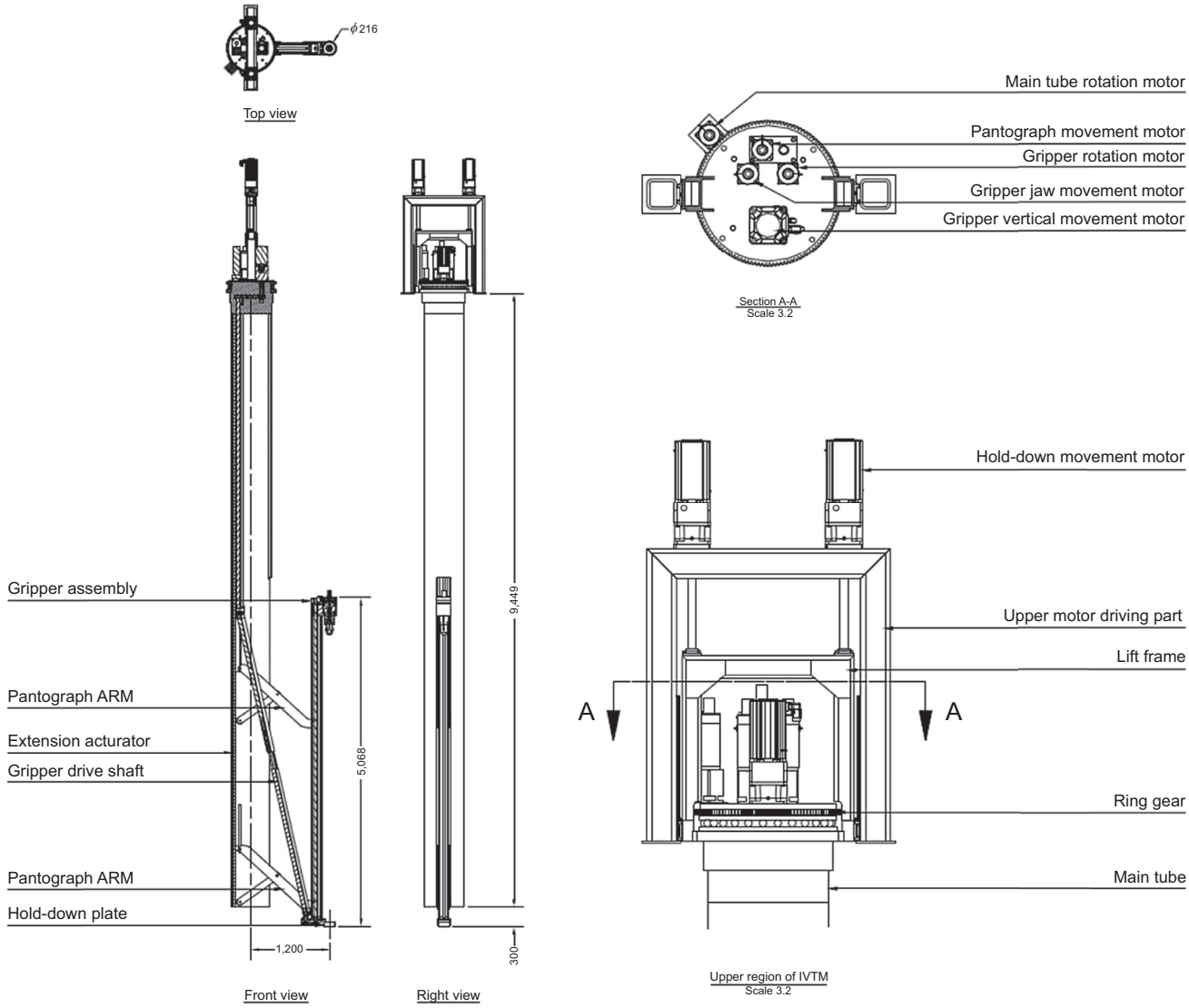

Fig. 7 – Design drawing of in-vessel transfer machine.

much lower temperature and its rise through the fuel slug. The fuel temperature is about 700°C during the normal operation, which is relatively close to the hot shutdown condition of 351°C. The small temperature gradient across the fuel radius and the relatively low operating temperature results in a smaller Doppler reactivity variation and consequently a reduced amount of control reactivity requirements. Thanks to the Doppler reactivity feedback of the fastest component among reactivity components, the reactivity and thermal transients become mild and slow, which leads to a longer grace period for operator action if needed. The low fuel temperature during the normal operation also provides a sufficient power-to-melt margin to the fuel melting temperature of about 1,250°C.

The fast neutron spectrum could eliminate the concern about the reactivity and power oscillation resulting from the variation of xenon and samarium concentrations in LWRs. Those neutron cross sections in the fast neutron energy region are much lower than in LWRs and do not contribute significantly to the reactivity and core power.

However, the fast neutron system has technical challenges on a recriticality issues. Because the fast reactor cores are not in their most reactive configuration, the design must ensure that the recriticality does not occur and consequently a large amount of mechanical energy is not released during a postulated accident. In the fast neutron system, a compaction of core or fissile material leads to the recriticality conditions. The other technical challenge is to ensure the core coolable geometry, even in a severe accident situation.

Metal fuel is chemically compatible with the sodium coolant, as sodium is initially filled between metal fuel slug and cladding. A melting temperature of the metal fuel is lower than that of cladding material. This means that the fuel melts prior to the melting of cladding. Molten metal fuel greatly expands by a phase change inside the cladding or the cladding will be breached by eutectic penetration and overpressure in the gas

plenum. The cladding failure is located near the top of the fuel column, at the highest temperature of coolant and cladding. The volumetric expansion of the fuel imposes the negative reactivity to the core. Meanwhile, the molten fuel released after the cladding failure does not solidify or block the coolant channel and is swept out from the core. This phenomenon also imposes the negative reactivity. The resolidified molten fuel debris is highly porous, which provides the coolability potential by natural circulation and heat conduction. This molten fuel motion was demonstrated in transient overpower tests at Transient Reactor Test Facility (TREAT) [7] and the fragmentation phenomena of molten fuel were tested through the injection of molten uranium metal into sodium [8,9].

In addition to the chemical and mechanical benefits, metal fuel is also favorable from the neutronics point of view, due to its inherently negative reactivity feedback. Axial and radial expansions of the fuel and the core impose negative reactivity when the core temperature is increased. Also, the smaller Doppler reactivity feedback effect of metal fuel is more favorable than oxide fuel, due to a significantly lower fuel operating temperature. The ability of these reactivity feedback effects to successfully reduce the core power during unprotected transients without scram was demonstrated in EBR-II tests [10].

The PGSFR has five physical barriers against the release of radionuclides during accidents: (1) fuel matrix; (2) cladding; (3) primary sodium coolant; (4) reactor coolant boundary; and (5) containment. The uses of metal fuel and sodium coolant make the transport behaviors of radionuclides much different from those of LWRs. The main differences lay on the behavior of iodine and cesium in the metal fuel and sodium. The iodine and cesium make a compound of CsI within the fuel matrix and transfer to the sodium bond. When the CsI reaches the sodium bond, it decomposes to Cs and a very stable NaI. The iodine also makes a compound with uranium metal as a form of UI_3 which can be separated from the fuel matrix only at very high temperature. The vaporization of NaI is known as less than that of sodium coolant. Then, the release of radioactive iodine outside the primary coolant boundary is a very low possibility. The cesium is dissolved into the primary sodium coolant. Although the vapor pressure of the cesium is higher than that of sodium, only a limited amount of cesium is gathered in the cover gas region due to repeated vaporization and condensation between the sodium free surface level and cover gas [11].

3.2. *Passive safety features*

The safety advantage from the inherent safety characteristics is strengthened by passive safety features employed in the PGSFR design. The reactor shutdown is ensured by the inherent negative reactivity feedback, two independent and diversified reactor shutdown systems, and a passive shutdown system. The passive shutdown system provides an additional margin against a common cause failure of the reactor shutdown system, although the current PGSFR design satisfies the safety limits even in case of anticipated transient without scram. The passive shutdown system utilizes thermal expansion and is automatically actuated by a temperature rise of hot pool sodium above the core. When the hot pool temperature increases to the specific point, the control rod assemblies are automatically detached from the electromagnet by thermal expansion and are dropped into the core by gravity. The passive shutdown system is implemented in the secondary control system.

Almost fully passive DHRSs ensure a highly reliable operation of the decay heat removal in addition to the intrinsic safety characteristics of a pool-type metal-fueled SFR. The core decay heat can be rejected to the ultimate heat sink (atmosphere) during an extended period only with the passive DHRS using natural circulation without internal and external power supplies. This leads to simpler decay heat removal operation and accident management allowing a long grace period for operator action and a longer coping time against the station black out.

In addition to the safety-grade DHRS, the reactor vault cooling system (RVCS), which is normally operated for cooling the concrete vault support, provides additional design measures during a severe accident. The RVCS is an ex-vessel cooling system using natural circulation of atmosphere and sufficiently sized to cool down molten fuel debris inside the reactor vessel when the safety-grade DHRS is not available.

4. R&D activities and works in progress

In order to support and demonstrate the safety performance of the PGSFR design, verification and validation activities are being performed in parallel with the design progress. A large-scale sodium thermal hydraulic test program called STELLA is being progressed in 2016. As the first step of the program, the sodium component tests of the PDHRS called STELLA-1 has been completed, the data obtained from which are to be used for validating computer codes for thermal sizing and system transient analysis of the PDHRS components. As the second step, an integral effect test loop called STELLA-2 has been started to demonstrate the plant safety and to support the PGSFR design certification. The integral test loop is to demonstrate the safety performance of the DHRS and RVCS in conjunction with the PHTS. The basic design of the STELLA-2 facility was already completed in 2015 and the detailed design is being carried out in 2016. The construction of STELLA-2 is scheduled by the end of 2018 and the demonstration of the integral effect test will be completed in the middle of 2020.

Various R&D activities are being performed, including verification and validation of computational codes and development of the metal fuel fabrication technology. The reactor mock-up physics experiment in the BFS facility was completed in 2015 in collaboration with Institute of Physics and Power Engineering (IPPE) in Russia. The validation of neutronics codes against the mock-up tests will be completed in 2016. All of the validation activities on reactor physics will be gathered and consolidated in the topical report to be issued at the end of 2017. Regarding the metal fuel fabrication technology, all parts of the fuel subassembly, fuel slug, advanced cladding, wire, and duct have been manufactured and are to be tested. The irradiation test of advanced cladding (FC92) was started at the BOR-60 experimental fast reactor in 2014 and its first interim inspection was completed in the middle of 2016. The test fuel rods were successfully fabricated in 2015 and their irradiation tests started in BOR-60 from June 2016.

5. Summary

Based on the experiences gained through the development of past KALIMER designs, the KAERI is developing the PGSFR design that can better meet the Gen IV technology goals and the technologies necessary for its early demonstration, with the aim of burning transuranics included in LWR SNF. Several advanced design concepts were developed to improve the economics, safety assurance, and metal fuel performance of SFR in the areas of reactor core, fuel and materials, reactor systems, and the balance-of-plant. The PGSFR has a plant capacity of 150 MWe. The NSSS consists of a pool type PHTS, two IHTS loops, a superheated steam Rankine cycle conversion system, and integrated once-through single-wall straight tube type SGs.

The safety design of the PGSFR emphasizes accident prevention by enhancing inherent safety characteristics and passive safety features using natural phenomena. The safety-grade DHRS has been implemented into the design while meeting the requirements of redundancy and diversity, which enables rejection of core decay heat only with passive design features. The passive design is also employed into the reactor shutdown system using thermal expansion.

To support the development of the PGSFR design and technologies, R&D activities are being performed for various topics including the validation of neutronics analysis codes, safety demonstration of DHRS in conjunction with primary systems, sodium technology development, and metal fuel qualification.

Conflicts of interest

All authors have no conflicts of interest to declare.

Acknowledgments

This work was supported by the Nuclear Research and Development Program of the National Research Foundation Grant funded by the Ministry of Science, ICT, and Future Planning (MSIP) in Korea (Number 2012M2A8A2008157).

REFERENCES

[1] D. Hahn, Y.-I. Kim, C.B. Lee, S.-O. Kim, J.-H. Lee, Y.-B. Lee, B.-H. Kim, H.-Y. Jeong, Conceptual design of the sodium-cooled fast reactor KALIMER-600, Nucl. Eng. Technol. 39 (2007) 193–206.

[2] D. Hahn, J.-W. Chang, Y.I. Kim, Y.-B. Lee, Advanced SFR design concepts and R&D activities, Nucl. Eng. Technol. 41 (2009) 427–446.

[3] J. Yoo, J. Chang, H.-K. Joo, Overall reactor system description of prototype Gen-IV sodium cooled fast reactor, Trans. Am. Nucl. Soc. 114 (2016) 694.

[4] System Description of Prototype Gen-IV Sodium-cooled Fast Reactor, SFR-000-SP-403–001, Korea Atomic Energy Research Institute, 2015.

[5] Preliminary Safety Information Document of PGSFR, Korea Atomic Energy Research Institute, 2015.

[6] T. Sofu, A review of inherent safety characteristics of metal alloy sodium-cooled fast reactor fuel against postulated accidents, Nucl. Eng. Technol. 47 (2015) 227–239.

[7] W.R. Robinson, T.H. Bauer, A.E. Wright, E.A. Rhodes, G.S. Stanford, A.E. Klickman, First TREAT transient overpower tests on U-Pu-Zr Fuel: M5 and M6, Trans. Am. Nucl. Soc. 55 (1987) 418.

[8] J.D. Gabor, R.T. Purviance, R.W. Aeschlimann, B.W. Spencer, Characterization of IFR metal fuel fragmentation, Trans. Am. Nucl. Soc. 54 (1987) 251.

[9] J.D. Gabor, R.T. Purviance, R.W. Aeschlimann, B.W. Spencer, Pour stream breakup of molten IFR metal fuel in sodium," ANS Topical Meeting, Safety of Next Generation Power Reactors, Seattle, WA, May 1–5, 1988.

[10] H.P. Planchon, J.I. Sackett, G.H. Golden, R.H. Sevy, Implications of the EBR-II inherent safety demonstration test, Nucl. Eng. Des. 101 (1987) 75–90.

[11] S.W. Lee, W.-P. Chang, K.-S. Ha, S.J. Ahn, S.H. Kang, C.-W. Choi, K.L. Lee, J.-H. Jeong, J.S. Kim, T. Jeong, Evaluation on in-vessel source term in PGSFR (2015 results), Trans. of the KNS spring meeting, Jeju, Korea, May 12–13, 2016.